Draft Indian Standard - D00-V2

ELECTRIC VEHICLE CONDUCTIVE CHARGING SYSTEM:

Part 2 Plugs, Socket - Outlets, Vehicle Connectors and Vehicle Inlets

Section 7 Dimensional compatibility and interchangeability requirements for a.c., d.c. and a.c./d.c. pin and contact-tube vehicle couplers intended to be used for a.c./d.c. EV supply equipment where protection relies on electrical separation

October 2024

Electrotechnology in Mobility Sectional Committee, ETD 51

Electrotechnology in Mobility Sectional Committee, ETD-51

FOREWORD

This standard (Part 2/Section 7) is proposed to the Electrotechnology in Mobility Sectional Committee approved by the Electrotechnical Division Council.

This standard (Part 2) is part of the series of standards which covers the mechanical, electrical and performance requirements for dedicated plugs, socket outlets, vehicle connectors and vehicle inlets for interfacing between such dedicated charging equipment and the electric vehicle.

This standard is to be read in conjunction with IS 17017 (Part2/Sec 1) : 2020

The cross references of IEC have been modified to refer to Indian Standards whenever available. Where corresponding Indian Standards are not available, the IEC references have been retained. The committee has decided that these IEC standards are suitable to be used till equivalent/corresponding Indian Standards are published.

For the purpose of deciding whether a particular requirement of this standard is complied with the final value, observed or calculated expressing the result of a test, shall be rounded off in accordance with IS 2 : 1960 ‘Rules for rounding of numerical values (revised)’. The number of significant places retained in the rounded off value should be the same as that of the specified value in this standard.

IS 17017 (Part 31) which is the Electric Vehicle Conduct Charging System - Part 31 . This standard to be used with the same.

1	**SCOPE**
	This Standard (Part 2/Sec 7) is applicable to vehicle couplers with pins and contact- tubes of standardised configuration, herein also referred to as “accessories”, intended for use in electric vehicle conductive charging systems which incorporate control means, with rated operating voltage: - up to 120 V d.c. and rated current up to 100 A - up to 240 V a.c. and rated current up to 32 A.
	This Standard (Part 2/Sec 7) applies to d.c. interfaces and combined a.c./d.c. interfaces of vehicle couplers specified in IS 17017 (Part 2/Sec 1) :2020, and intended for use in conductive charging systems for circuits specified in IS 17017 (Part 31).
	This section of IS 17017 (Part 2/Sec 7) applies to the vehicle couplers to be used in an ambient temperature of between -25 °C and +55 °C.
	These vehicle couplers are intended to be connected only to cables with copper or copper- alloy conductors.
	Accessories covered by this standard shall be of non-rewireable type only.
2	**REFERENCES**
	Clause 2 of IS 17017 (Part 2/Sec 1) shall be applicable except following
	Addition: IS 17017 (Part 2/Sec 1) : 2020, Electric vehicle conductive charging system Part 2: Plugs, socket-outlets, vehicle connectors and vehicle inlets – Conductive charging of electric vehicles – Section 1: General requirements
	IS 17017 (Part 31) : 2024 a.c. or d.c. EV supply equipment for where protection relies on electrical separation.
3	**TERMINOLOGY**
	Clause 3 of IS 17017 (Part 2/Sec 1) shall be applicable
4	**GENERAL**
	Clause 4 of IS 17017 (Part 2/Sec 1) shall be applicable except following:

4.1	*Replacement*: 4.1.1 **General requirements** The accessories covered by this standard shall only be used with EV supply equipment that complies with the requirements of IS 17017 (Part 31). Accessories shall be so designed and constructed that in normal use : - Their performance is reliable and ensures that there is no risk and danger to the user or surroundings. - It is not possible to make a cord extension set (see clause 11.4, IS:17017- (Part:1)-2018). - The plug and the vehicle connector shall not be compatible
	Compliance is checked for meeting all the relevant requirements and tests specified.
	Compliance is checked by a manual test.
5	**RATINGS**
	Clause 5 of IS 17017 (Part 2/Sec 1) shall be applicable except following:
5.1	*Replacement* **Preferred rated operating voltage ranges** The preferred rated operating voltage ranges are: a) 0 V to 30 V (signal or control purposes only); b) 100V a.c. to 130 V a.c. c) 200 V a.c. to 240 V a.c. d) 0 V d.c.to 120 V d.c.
5.2.1	*Replacement* **General** The preferred rated currents for vehicle coupler and for cable assembly are: a) 16 A to 20 A b) 30 A to 32 A c) 50 A (d.c. only) d) 70 A (d.c. only) e) 100 A (d.c. only)
5.2.2	*Replacement* **Rated current for signal or control purposes** Rated current for signal or control purposes is 2A.

6 CONNECTION BETWEEN THE POWER SUPPLY AND THE ELECTRIC VEHICLE

Clause 6 of IS 17017 (Part 2/Sec 1) shall be applicable except following:

6.1 *Replacement*

This clause provides a description of the physical conductive electrical interface requirements between the vehicle and the power supply for different types of interface:

a) a.c. interface

b) d.c. interface; and

c) combined a.c. and d.c. interface

6.2 *Replacement*

Clause 6.4 of IS 17017 (Part 2/Sec 1) is not applicable

6.3 *Replacement*

A.C. Interface

The a.c. interfacecontains up to 9 (power or signal) contacts, with only one physical configuration of contact positions for single-phase AC.

The interfaces shall only be used with the a.c. electric vehicle charging system as described in IS 17017 (Part 31)

The electrical ratings and their functions are described in Table 701.

Table 701 Overview of A.C. Interface

Serial number [1)]	Symbol	U_{max} V	I_{max} A	Functions
1	DC +	120 (d.c.)	100	Optional
2	DC -	120 (d.c.)	100	Optional
3	L1	240 (a.c.)	32	Live (Mains 1)
4	N	240 (a.c.)	32	Neutral
5	PE	Rated for fault [2)]	Rated for fault [2)]	Protective Earth
6	CP	30	2	Control Pilot
7	PP	30	2	Proximity Pilot
8	CAN+	30	2	Communication1 + (CAN High)
9	CAN-	30	2	Communication1 - (CAN Low)

1) Serial number is not the identification of the contact in the accessory
2) "Rated for fault" means "rated for the highest fault current"

6.6 *Replacement*

D.C. Interface
The d.c. interface may contain up to 9 (power or signal) contacts, with only one physical configuration of contact positions.

The interfaces shall only be used with the d.c. electric vehicle charging system as described in IS 17017 (Part 26) :2024.

The electrical ratings and their function are described in Table 702.

Table 702 Overview of DC Interface

Serial number [1]	Symbol	U_{max} V	I_{max} A	Functions
1	DC +	120 (d.c.)	100	DC +
2	DC -	120 (d.c.)	100	DC -
3	L1	240 (a.c.)	32	Optional
4	N	240 (a.c.)	32	Optional
5	PE	Rated for fault [2]	Rated for fault [2]	Protective Earth
6	CP	30	2	Control Pilot
7	PP	30	2	Proximity Pilot
8	CAN+	30	2	Communication1 + (CAN High)
9	CAN-	30	2	Communication1 - (CAN Low)

1) Serial number is not the identification of the contact in the accessory
2) "Rated for fault" means "rated for the highest fault current"

6.7 *Replacement*

Combined Interface:

A combined interface is made by suitably combining the interface of a.c. and d.c charging. This is achieved by providing separate a.c. and d.c. power contacts to supply either a.c. or d.c. energy to the electric vehicle.

Combined couplers shall only be used for a.c or d.c. charging with the a.c or d.c. electric vehicle charging system as specified in IS 17017 (Part 26) : 2024.

The electrical ratings and their function are described in Table 703. Both the AC and DC contacts are electrically and mechanically identical.

If the a.c. or d.c ratings of a mating connector and inlet differ, the coupler (mating pair) shall be used at the lower rating of either the vehicle connector or vehicle inlet of the mating accessory.

Table 703 Overview of Combined Interface

Serial number [1]	Symbol	U_{max} V	I_{max} A	Functions
1	DC +	120 (d.c.)	100	DC +
2	DC -	120 (d.c.)	100	DC -
3	L1	240 (a.c.)	32	Live (Mains 1)
4	N	240 (a.c.)	32	Neutral
5	PE	Rated for fault [2]	Rated for fault [2]	Protective Earth
6	CP	30	2	Control Pilot
7	PP	30	2	Proximity Pilot
8	CAN+	30	2	Communication1 + (CAN High)
9	CAN-	30	2	Communication1 - (CAN Low)

	1) Serial number is not the identification of the contact in the accessory 2) "Rated for fault" means "rated for the highest fault current"
7	**CLASSIFICATION OF ACCESSORIES**
	Clause 7 of IS 17017 (Part 2/Sec 1) shall be applicable except following:
7.1	*Replacement* **According to purpose** a) Vehicle connectors b) Vehicle Inlets c) Cable assemblies
7.2	*Replacement* **According to method of connecting the conductors** a) Non-rewirable accessories
7.4	*Replacement* **According to electrical operation** a) not suitable for making and breaking an electrical circuit under load
8.0	**MARKING**
	Clause 8 of IS 17017 (Part 2/Sec 1) shall be applicable
9	**DIMENSIONS**
	Clause 9 of IS 17017 (Part 2/Sec 1) shall be applicable except following:
9.1	*Replacement*: The vehicle connector and vehicle inlet shall comply with configuration shown in Standard Sheet 7A and Standard Sheet 7B
10	**PROTECTION AGAINST ELECTRIC SHOCK**
	Clause 10 of IS 17017 (Part 2/Sec 1) shall be applicable
11	**SIZE AND COLOUR OF PROTECTIVE EARTHING AND NEUTRAL CONDUCTORS**
	Clause 11 of IS 17017 (Part 2/Sec 1) shall be applicable except following:
	Replacement of Table 6

Table 6 : Size for conductors

(Clauses 11,13.1.9,13.2.1,13.3.2,16.10,16.13,27.1,28.1 and 31.3)

Contact Rating Current A	Flexible Cables for Plugs and Vehicle Connectors[a] Solid or Stranded Cables for Vehicle Inlets[1]) mm²	Flexible Cables for Plugs and Vehicle Connectors[a] Solid or Stranded Cables for Vehicle Inlets[1]) AWG/MCM
2	0.5	20
16 and 20	1.0 to 2.5	18 to 14
30 and 32	2.5 to 6	14 to 10
50	6 to 10	10 to 8
70	10 to 16	8 to 6
100	16 to 25	6 to 4

Flexible cables according to the IEC 62893 series.
b Classification of conductors: according to IEC 60228.
c The nominal cross-sectional areas of conductors are given in square millimetres (mm2). AWG/MCM values are considered as equivalent to mm2 for the purpose of this document.
Reference IEC 60999-1 : 1999 (Annex A), IEC 60999-2 : 2003 (Annex C).
AWG: American Wire Gauge is a system of identifying wires in which the diameters are found in geometric progression between size 36 and size 0000.
MCM: Mille Circular Mils denotes circle surface unit. 1 MCM = 0.5067 mm2.

12 PROVISION FOR EARTHING

Clause 12 of IS 17017 (Part 2/Sec 1) shall be applicable except following:

12.1 *Replacement*
Accessories shall be provided with a protective earthing contact and earthing terminal in case that the vehicle is connected galvanically to the mains through this accessory. Protective earthing contacts shall be directly and reliably connected to the protective earthing terminals.

	If the vehicle is connected to the electric vehicle charging station with the insulating device between the vehicle and the mains (for example, insulating transformer), the vehicle is deemed not to be galvanically connected.
13	**TERMINALS**
	Clause 13 of IS 17017 (Part 2/Sec 1) : 2020 shall be applicable
14	**INTERLOCKS**
	Clause 14 of IS 17017 (Part 2/Sec 1) : 2020 shall be applicable
15	**RESISTANCE TO AGEING OF RUBBER AND THERMOPLASTIC MATERIAL**
	Clause 15 of IS 17017 (Part 2/Sec 1) :2020 shall be applicable
16	**GENERAL CONSTRUCTION**
	Clause 16 of IS 17017 (Part 2/Sec 1):2020 shall be applicable except following:
16.9	*The vehicle coupler to include a means to allow engagement of a locking mechanism to reduce the likelihood of tampering or unauthorised removal or connection.*
16.15	*Replacement of the first paragraph by:* The force to insert and withdraw a vehicle connector shall be less than 100 N. Means to facilitate easy insertion and withdrawal of the vehicle connector from the vehicle inlet may be provided. If a vehicle coupler is equipped with an assist device to reduce this force (for example, mechanical assist device), the operating force of the assist device shall be less than 100 N. Compliance is checked by inspection.
17	**CONSTRUCTION OF SOCKET OUTLETS**
	Clause 17 of IS 17017 (Part 2/Sec 1) :2020 shall be applicable
18	**CONSTRUCTION OF PLUGS AND VEHICLE CONNECTORS**
	Clause 18 of IS 17017 (Part 2/Sec 1) :2020 shall be applicable
19	**CONSTRUCTION OF VEHICLE INLETS**
	Clause 19 of IS 17017 (Part 2/Sec 1):2020 shall be applicable

20	**DEGREES OF PROTECTION**
	Clause 20 of IS 17017 (Part 2/Sec 1) shall be applicable except following:
20.1	*Replacement of first paragraph with:* Accessories shall have the minimum degrees of protection as required in IS 17017 (Part 31) : 2024.
21	**INSULATION RESISTANCE AND DIELECTRIC STRENGTH**
	Clause 21 of IS 17017 (Part 2/Sec 1) shall be applicable
22	**BREAKING CAPACITY**
	Clause 22 of IS 17017 (Part 2/Sec 1) shall be applicable except following:
22.3	*Replacement*: DC accessories or DC portions of combined AC/DC accessories are not required to be tested in accordance with Clause No. **22.3** of IS17017:(Part2/Sec 1) :2020
23	**NORMAL OPERATION**
	Clause 23 of IS 17017 (Part 2/Sec 1) shall be applicable except following:
	Replacement:

Table 16: Normal Operation

Rated Current, A	cos φ ±0.05 2)	No Load (No. of cycles)
2	0.8(1)	10000
16-20	0.6(1)	10000
30-32	0.6(1)	10000
50	--	10000
70	--	10000
100	--	10000

1) For an accessory provided with an interlock (for example, pilot circuit) or classified “Not suitable for making and breaking an electrical circuit under load”, the number of cycles of operation under load is 50 and no-load is 10 000.

2)cos φ denotes lagging power factor.

24 TEMPERATURE RISE

Clause 24 of IS 17017 (Part 2/Sec 1) shall be applicable except following:

Replacement

Table 17 - Test Current and Nominal Cross-Sectional Areas of Copper Conductors for Temperature Rise Test

Rated Current	Test Current	Cross-sectional Area(s) of the Conductors Plugs, Vehicle Inlets, Vehicle Connectors	
A	A	mm^2	AWG/MCM
2	2	0.50	20
16-20	22	2.50	14
30-32	42	6.0	10
50	50	10	8
70	70	16	6
100	100	25	4

25 FLEXIBLE CABLES AND THEIR CONNECTION

Clause 25 of IS 17017 (Part 2/Sec 1) shall be applicable except following:

Replacement

Table 18:Pull Force and Torque Test Values for Cable Anchorage

Rated current A	Pulling Force N	Torque Nm	Maximum Displacement mm
16-20	160	0.6	2
30-32	200	0.7	2
50	225	1.0	2
70	240	1.2	2
100	240	1.5	2

26 MECHANICAL STRENGTH

Clause 26 of IS 17017 (Part 2/Sec 1) shall be applicable

27 SCREWS, CURRENT-CARRYING PARTS AND CONNECTIONS

Clause 27 of IS 17017 (Part 2/Sec 1) shall be applicable

28 CREEPAGE DISTANCES, CLEARANCES AND DISTANCES

Clause 28 of IS 17017 (Part 2/Sec 1) shall be applicable

29 RESISTANCE TO HEAT, FIRE AND TRACKING

Clause 29 of IS 17017 (Part 2/Sec 1) shall be applicable

30 CORROSION AND RESISTANCE TO RUSTING

Clause 30 of IS 17017 (Part 2/Sec 1) shall be applicable

31 CONDITIONAL SHORT-CIRCUIT CURRENT WITHSTAND TEST

Clause 31 of IS 17017 (Part 2/Sec 1) is not applicable

32 ELECTROMAGNETIC COMPATIBILITY

	Clause 32 of IS 17017 (Part 2/Sec 1) shall be applicable
33	**VEHICLE DRIVE-OVER**
	Clause 33 of IS 17017 (Part 2/Sec 1) shall be applicable except following:
	Replacement
33.2	*Accessories wired with the minimum size cable of a type recommended by the manufacturer shall be placed on a concrete floor in any normal position of rest, with the means for ensuring the required degree of protection against moisture, if any, being positioned as in normal use. A crushing force shall be applied with a wheel load of 1000 ± 25 N by a conventional automotive tyre, 90/90-12 or an equivalent tyre suitable for the load, mounted on a steel rim and inflated to a pressure of 2.2 ± 0.1 bar(1 bar = 105Pa). The wheel is to be rolled over the vehicle connector or plug at a speed of 8 ± 2 km/h. The accessory is to be oriented in a natural resting position before applying the force in a different direction for each sample. The accessory under test shall be held or blocked in a fixed position so that it does not move substantially during the application of the applied force. In no case is the force to be applied to the projecting pins.* *There shall be no severe cracking, breakage, or deformation to the extent that'* *a) live parts, other than exposed wiring terminals, or internal wiring are made accessible to contact by the standard test finger shown in Fig. 3. See 10.1;* *b) the integrity of the enclosure is defeated so that acceptable mechanical or environmental (degrees of) protection is not afforded to the internal parts of the accessory, or polarisation of the accessory is defeated;* *c) there is interference with the operation, function or installation of the accessory;* *d) the accessory does not provide adequate strain relief for the flexible cable;* *e) the creepage distances and clearances between live parts of opposite polarity, live parts and accessible dead or earthed metal are reduced below the values in 28.1;* *f) other evidence of damage that could increase the risk of fire or electric shock occurs; and* *g) the accessory does not comply with a repeated dielectric test in accordance with 21.3.*
33.3	:Not applicable
33.4	Not applicable

STANDARD SHEETS
STANDARD SHEET 7A

Sheet 1
VEHICLE INLET

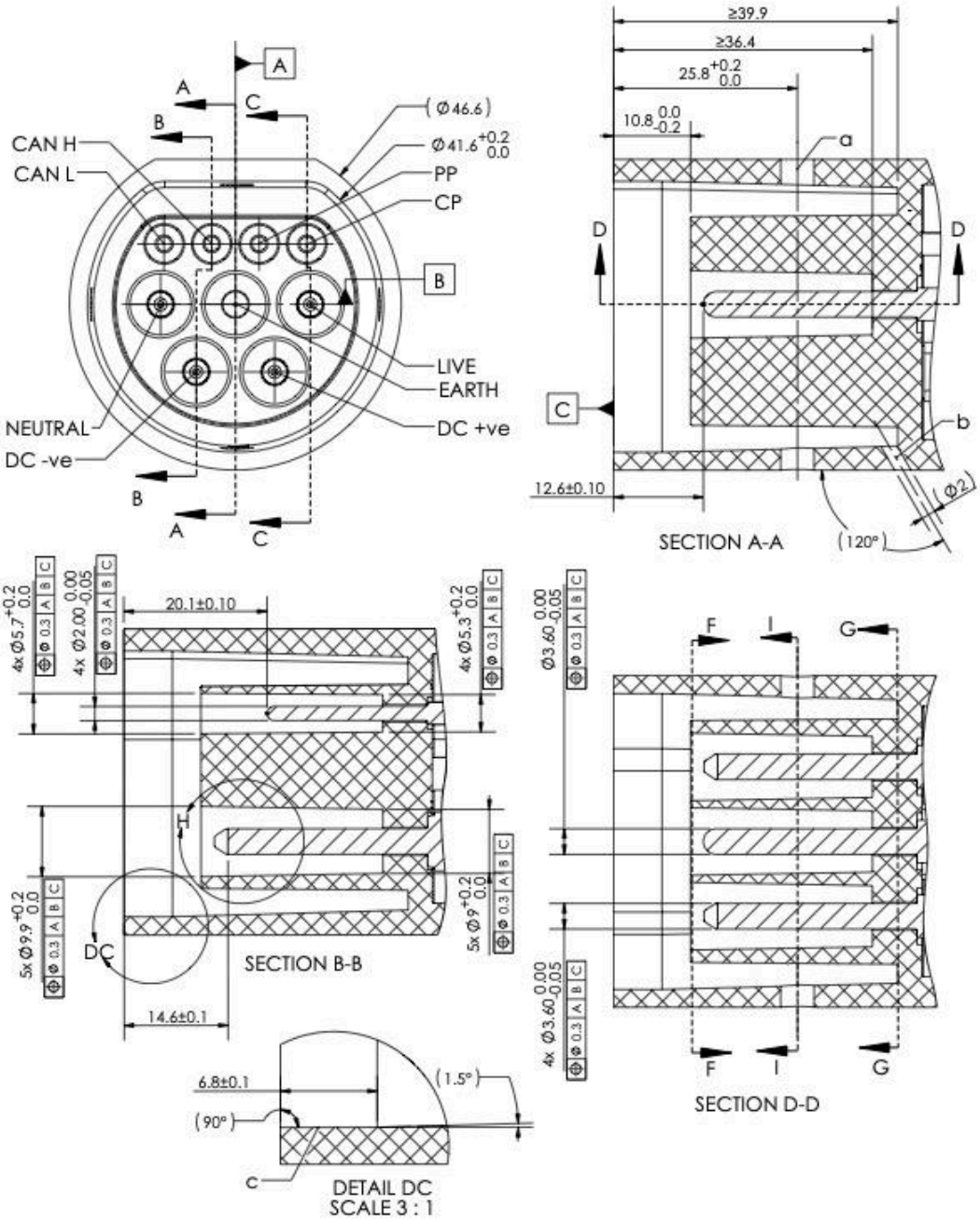

Key:
a - Latching feature, at least one latching feature to be used
b - Drain Hole (Optional)
c - Sealing Groove mating surface

NOTES
1. Non-dimensioned radii (R): 0.5 to 0.7mm

STANDARD SHEET 7A

Sheet 2 *(Continuation of Sheet 1)*

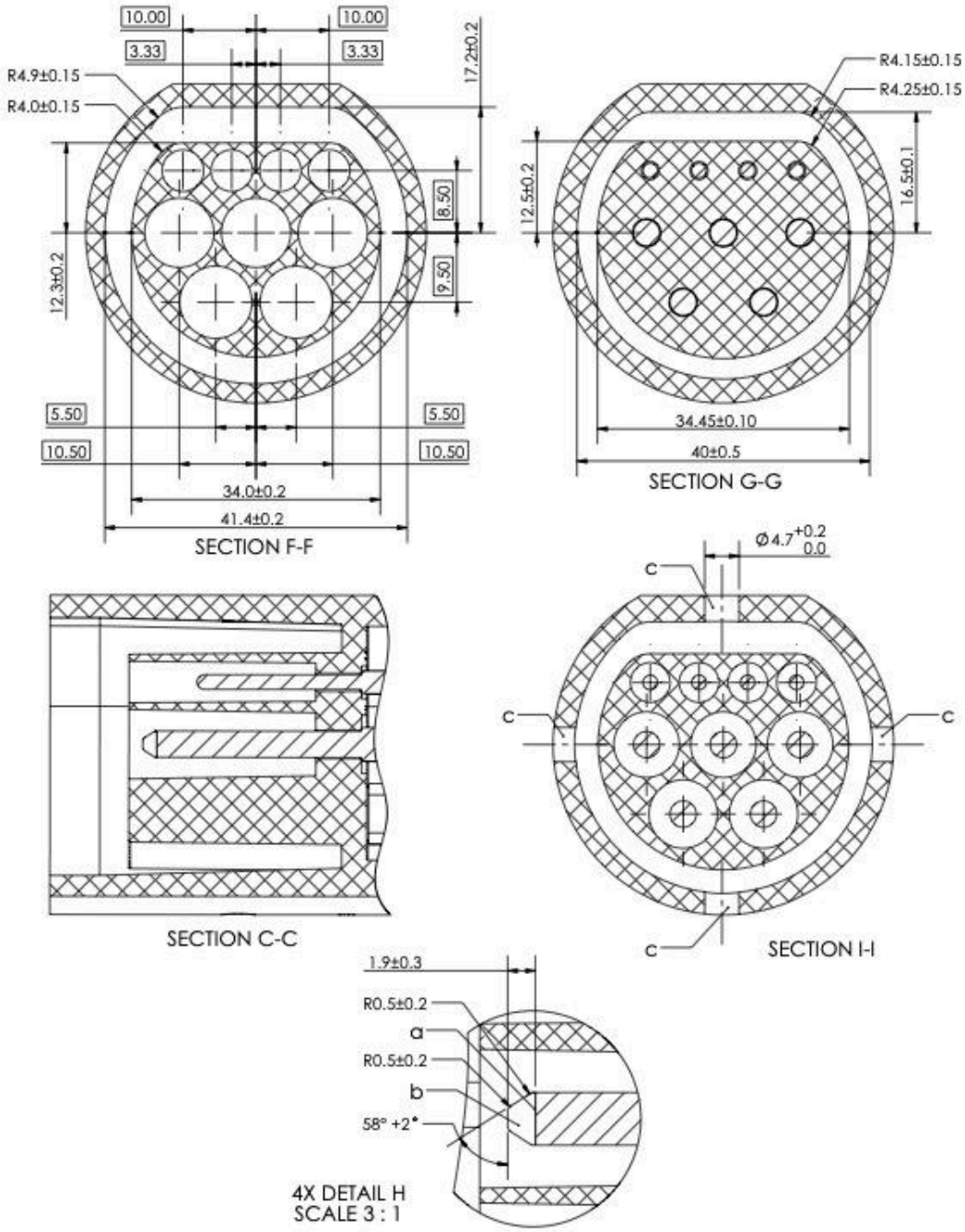

Key:
a - No sharp edges acceptable at the transition region
b - Isolated Cap
c - Latching feature, at least one latching feature to be used

NOTES
1. Non-dimensioned radii (R): 0.5 to 0.7mm

STANDARD SHEET 7B

Sheet 1

VEHICLE CONNECTOR

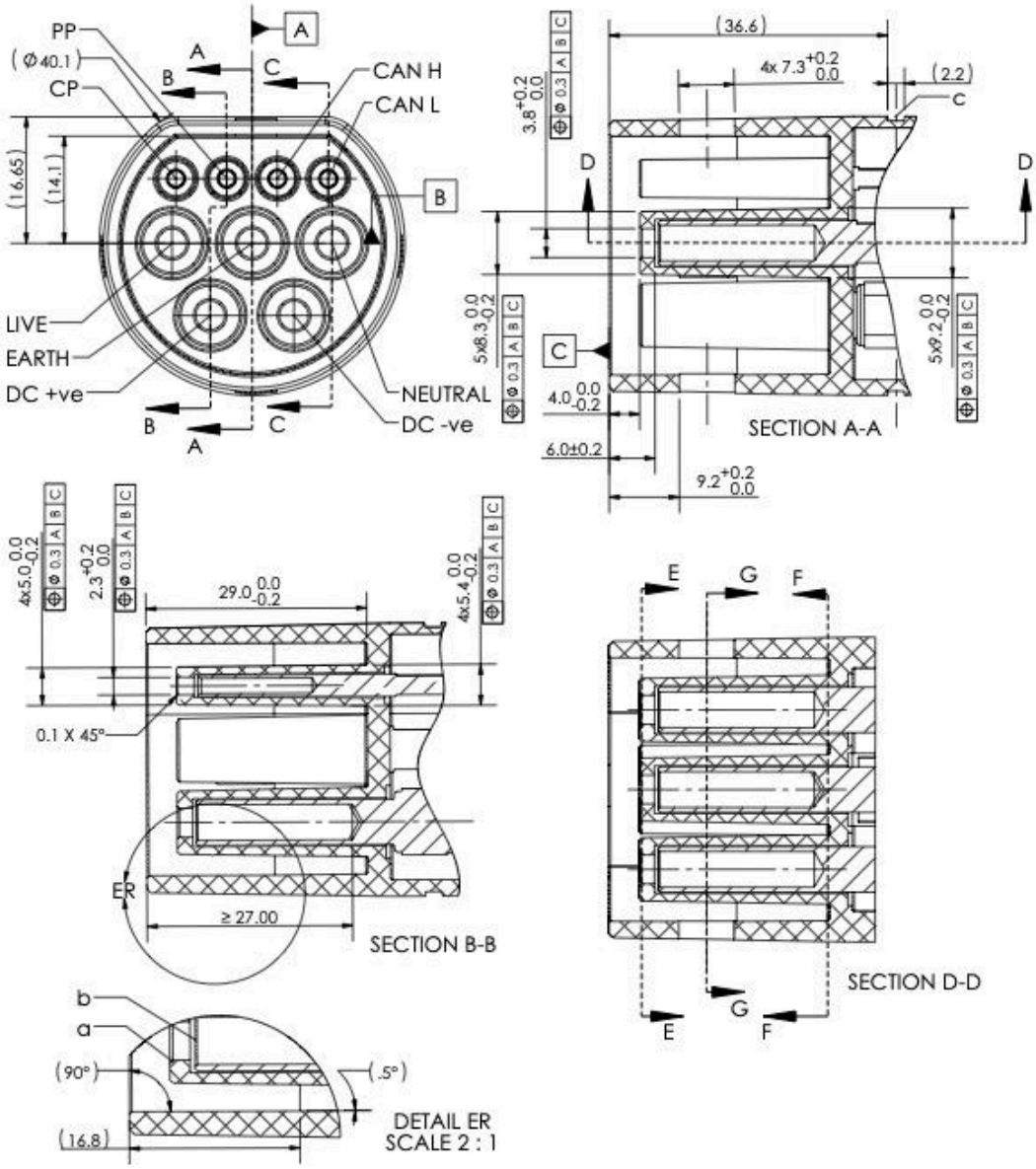

Key:
a - Chamfer on sleeve for easy insertion
b - Contact Point
c - Mated condition Sealing Groove

NOTES
1. Non-dimensioned radii (R): 0.5 to 0.7mm
2. Maximum surface roughness in sealing area (Ra): 0.7µm

STANDARD SHEET 7B

Sheet 2 *(Continuation of Sheet 1)*

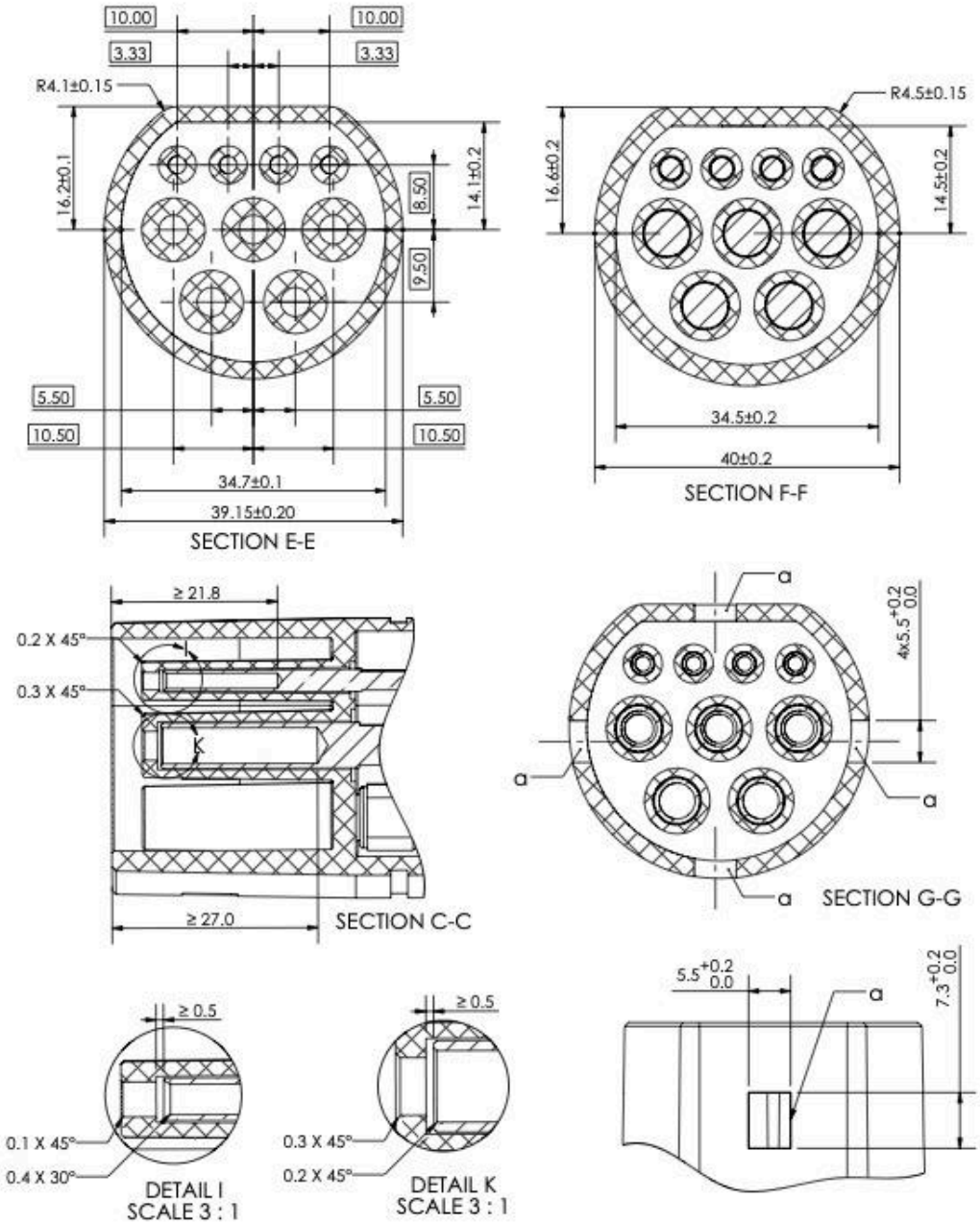

Key:
a - Latching feature, at least one latching feature to be used

NOTES
1. Non-dimensioned radii (R): 0.5 to 0.7mm

STANDARD SHEET 7C

VEHICLE CONNECTOR PACKAGING ROOM

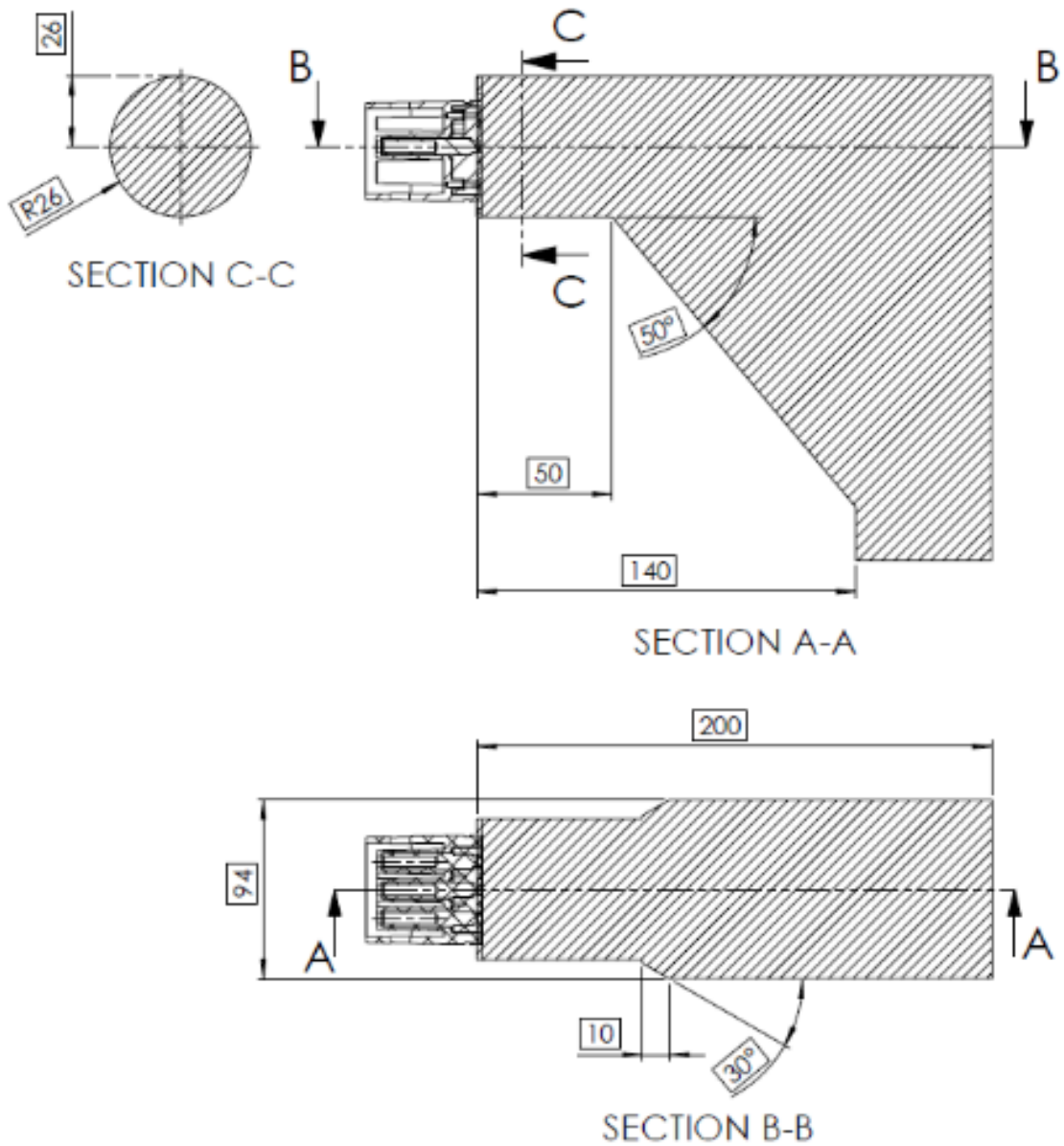

Vehicle connector body shape shall be within the shaded area